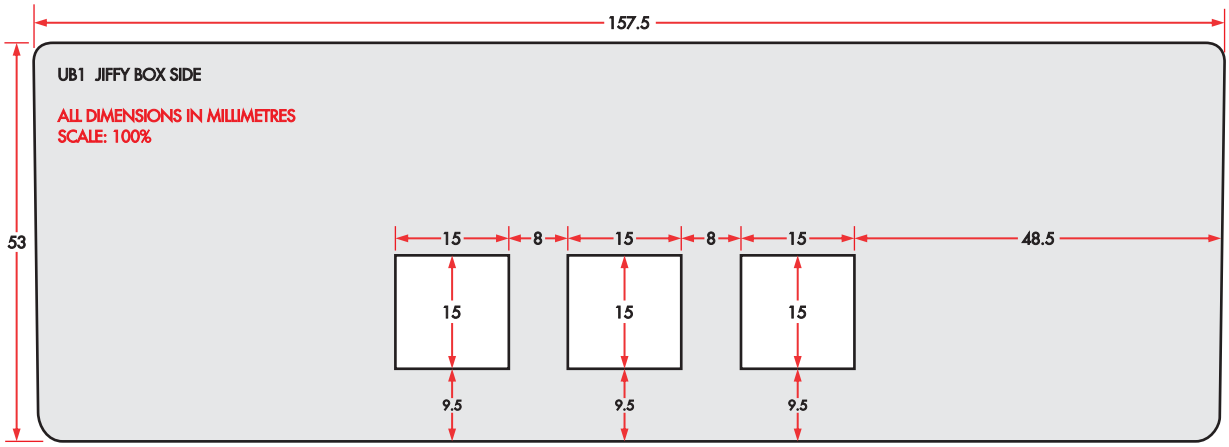

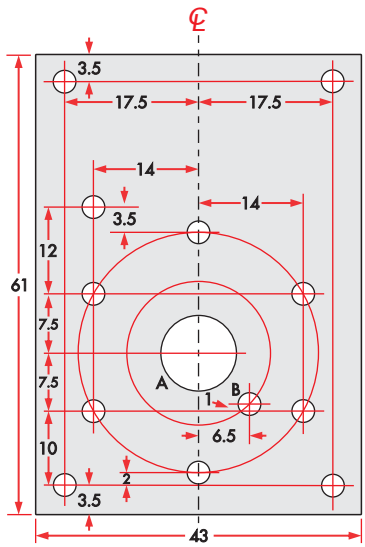

ALL HOLES 3mm DIAMETER EXCEPT
HOLE A: 10mm DIAMETER
HOLE B (3mm) IS FOR LOCATING PIN