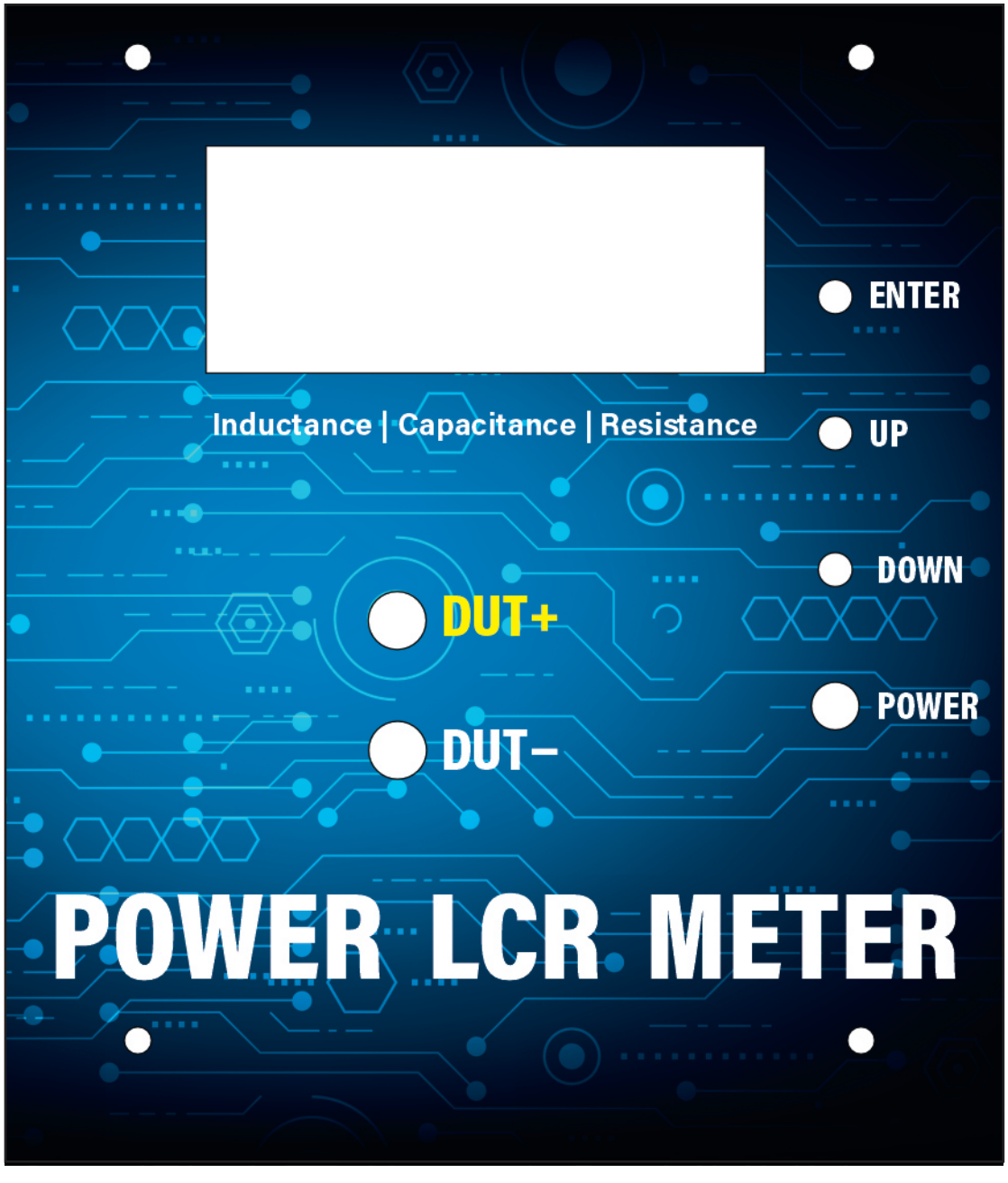
ENTER
Inductance | Capacitance | Resistance
UP
DOWN
DUT+
POWER
DUT–
POWER LCR METER

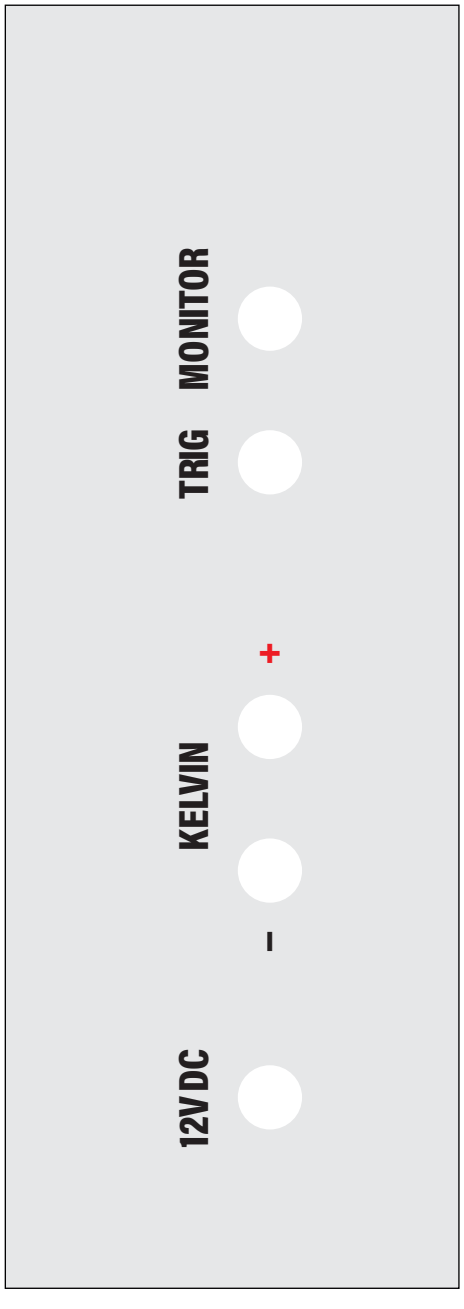
MONITOR
TRIG
+
KELVIN
–
12V DC

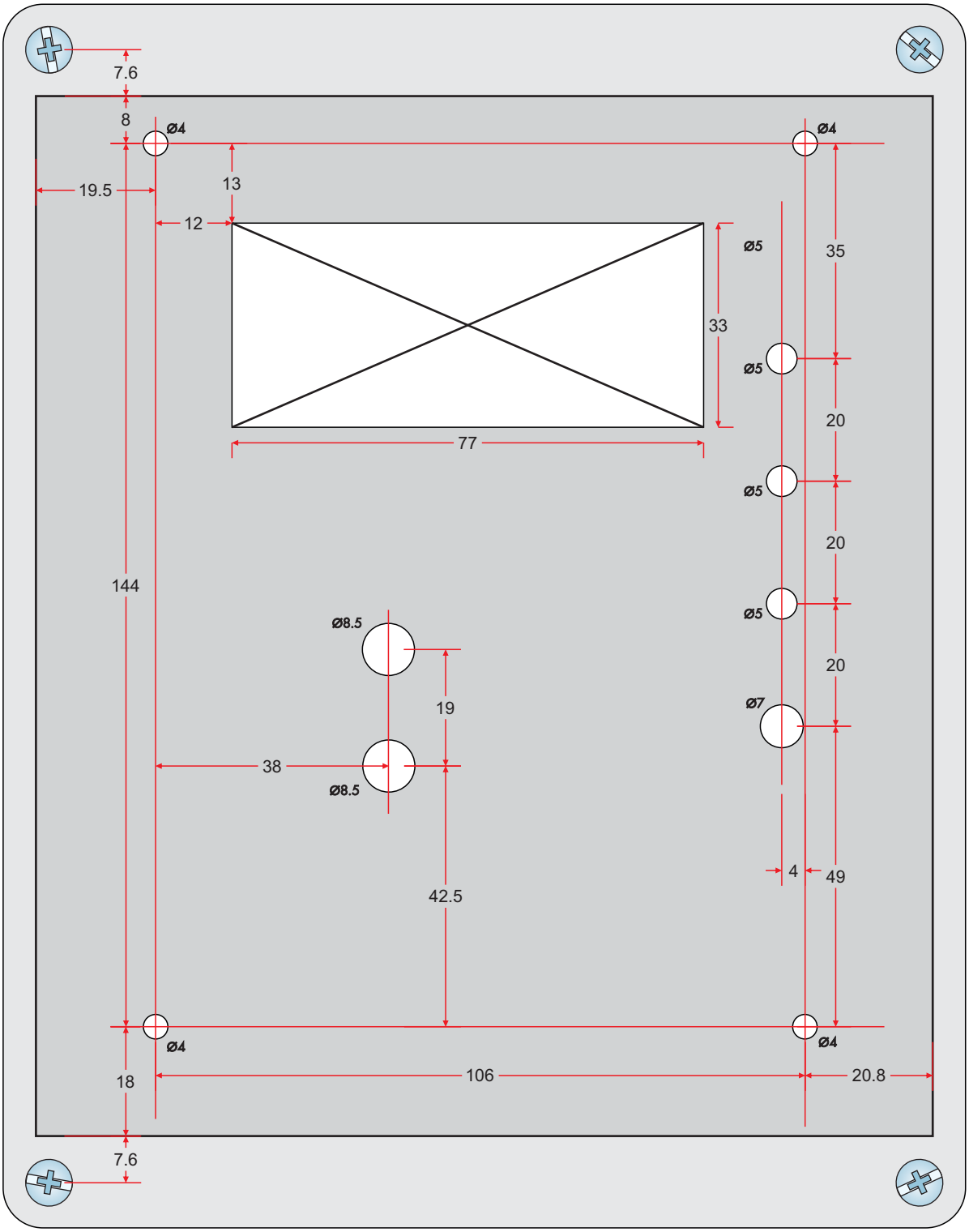

ALL DIMENSIONS IN MILLIMETRES SCALE: 100%

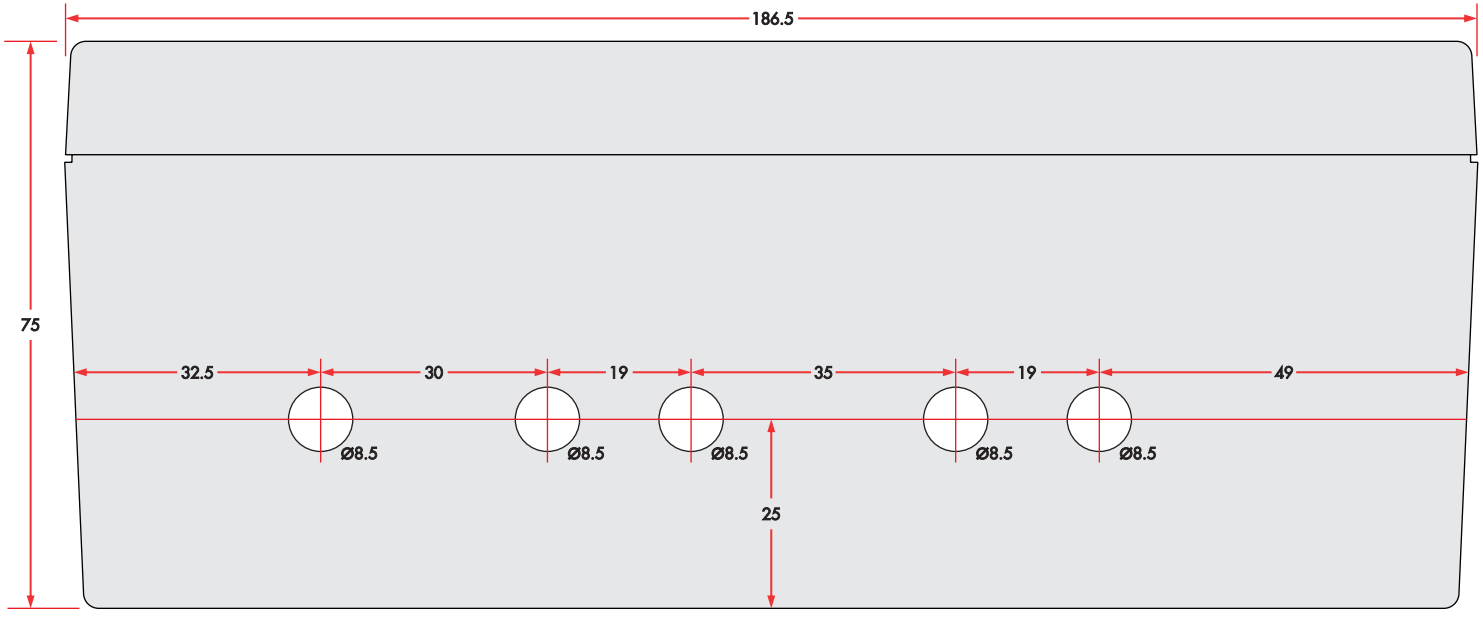
186.5
75
32.5
30
19
35
19
49
Ø8.5
Ø8.5
Ø8.5
Ø8.5
Ø8.5
25