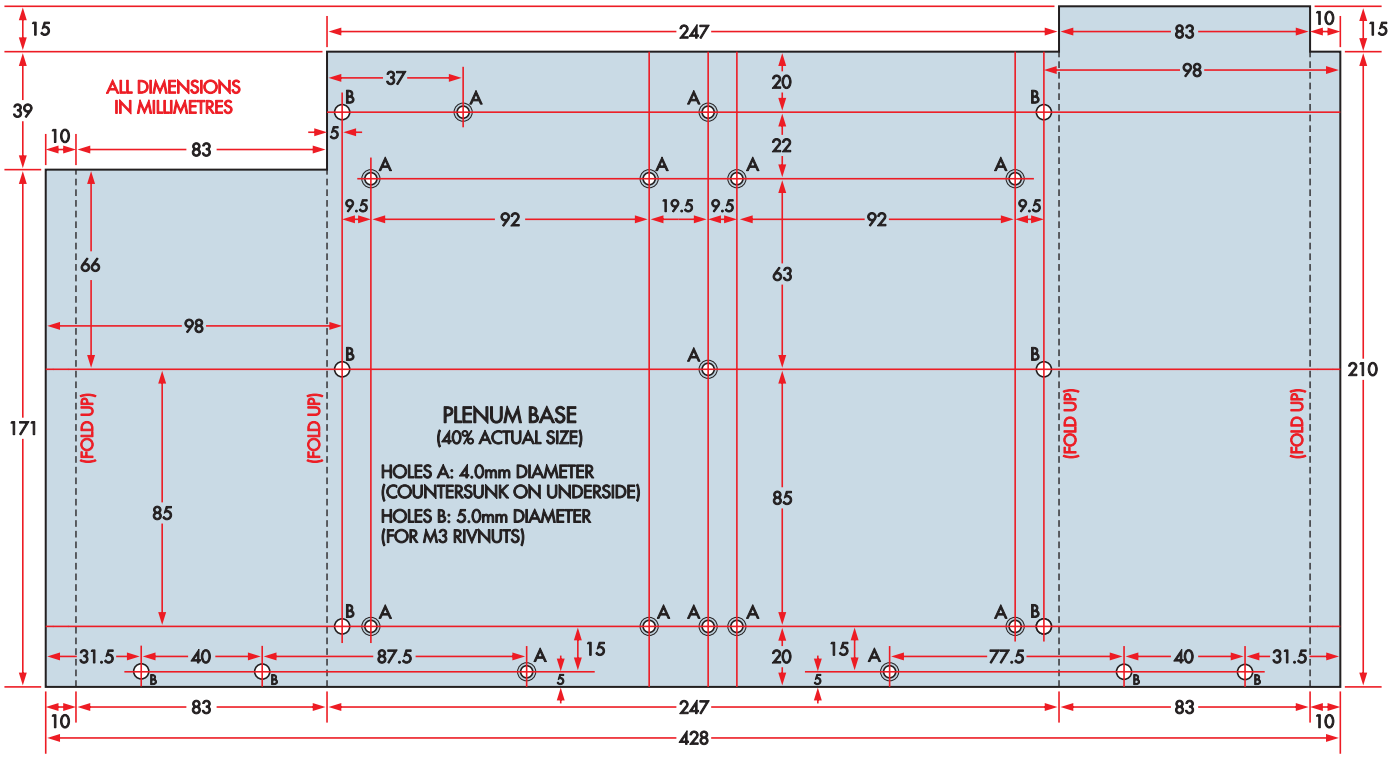
ALL DIMENSIONS IN MILLIMETRES
PLENUM BASE
(40% ACTUAL SIZE)
HOLES A: 4.0mm DIAMETER
(COUNTERSUNK ON UNDERSIDE)
HOLES B: 5.0mm DIAMETER
(FOR M3 RIVNUTS)
(FOLD UP)
247
83
98
37
20
22
9.5
92
19.5
63
66
85
171
210
31.5
40
87.5
77.5
15
5
10
428

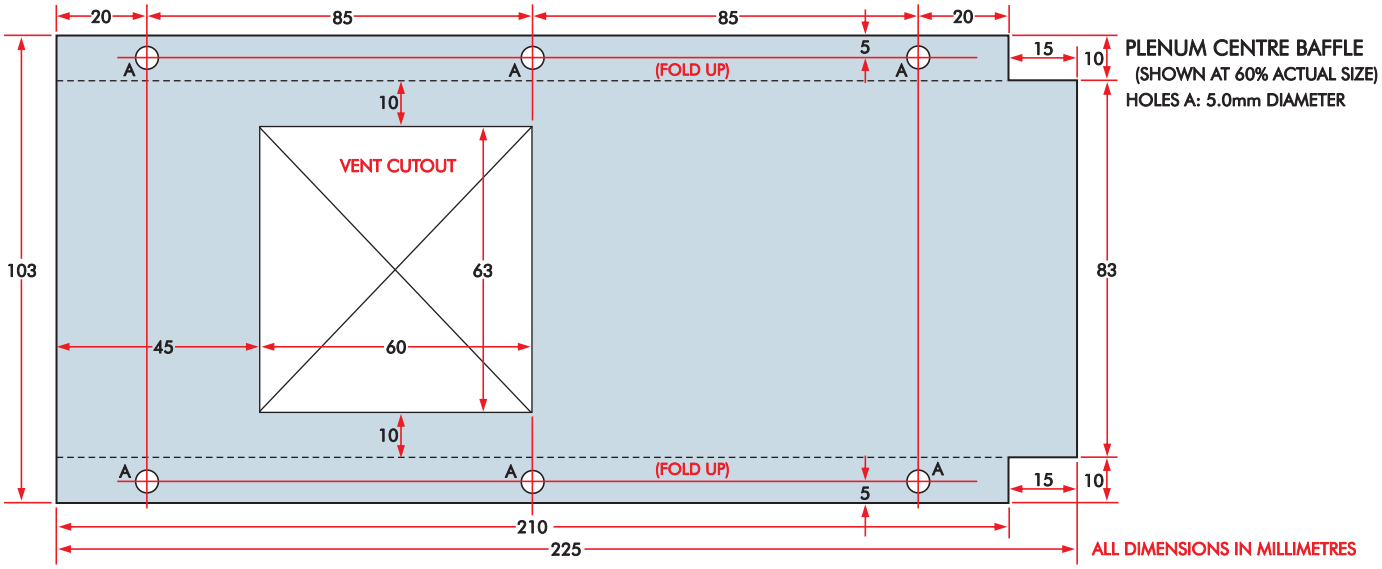
PLENUM CENTRE BAFFLE
(SHOWN AT 60% ACTUAL SIZE)
HOLES A: 5.0mm DIAMETER
VENT CUTOUT
(FOLD UP)
20
85
15
10
5
103
83
63
45
60
210
225
ALL DIMENSIONS IN MILLIMETRES

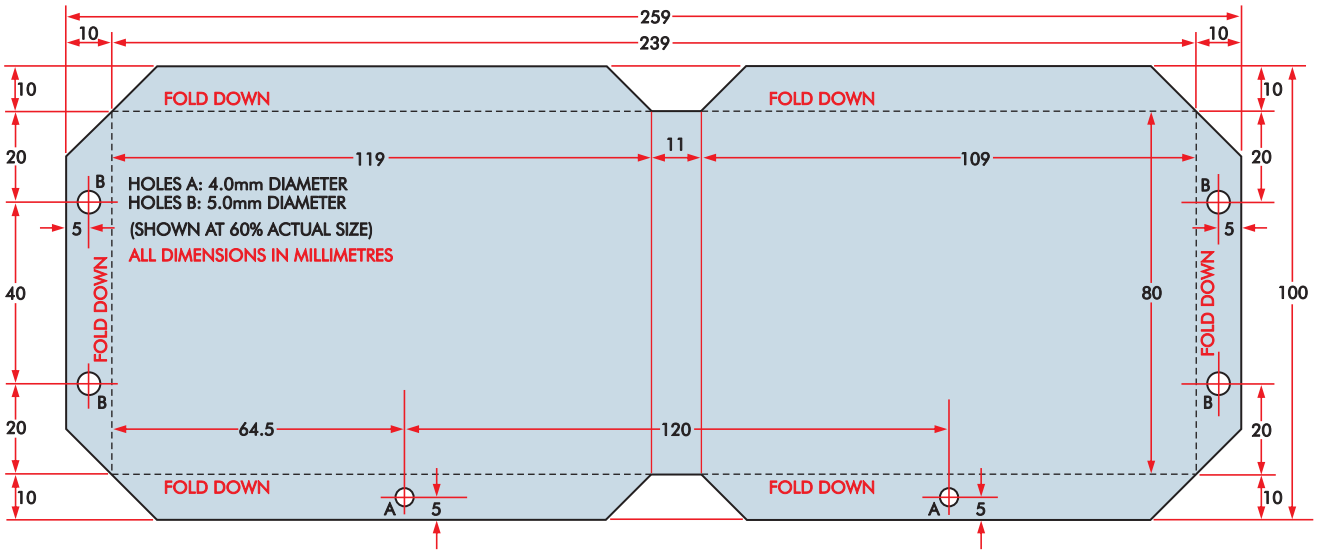
FOLD DOWN
HOLES A: 4.0mm DIAMETER
HOLES B: 5.0mm DIAMETER
(SHOWN AT 60% ACTUAL SIZE)
ALL DIMENSIONS IN MILLIMETRES
259
239
10
20
119
11
109
40
80
100
64.5
120
5

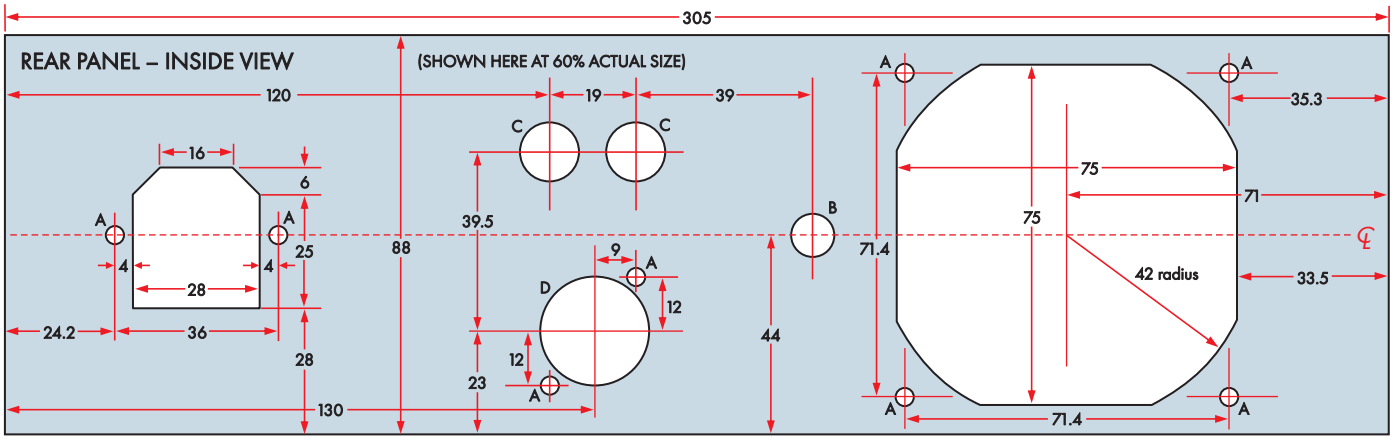

HOLES A: 4.0mm DIAMETER HOLE B: 9.5mm DIAMETER HOLES C: 13.0mm DIAMETER HOLE D: 24.0mm DIAMETER
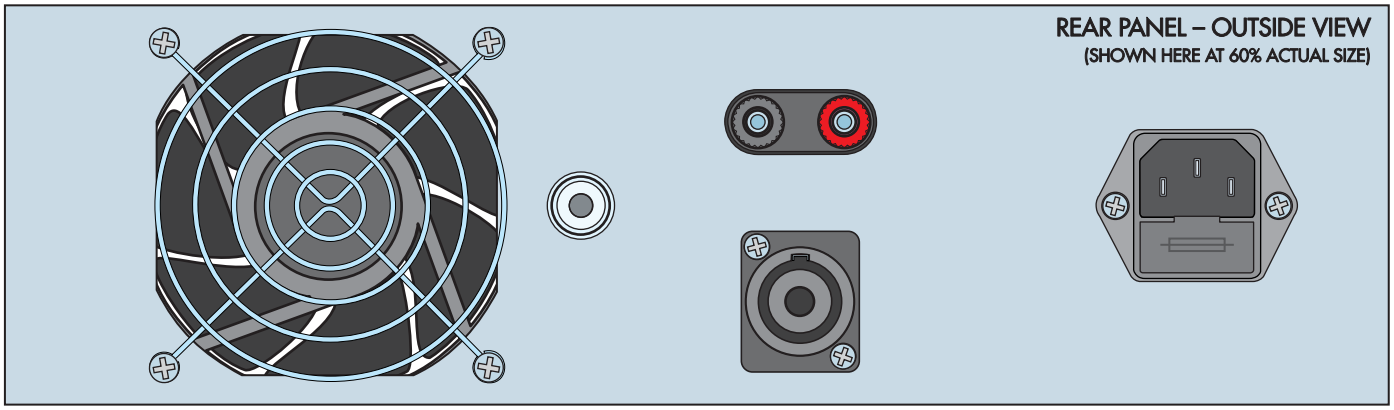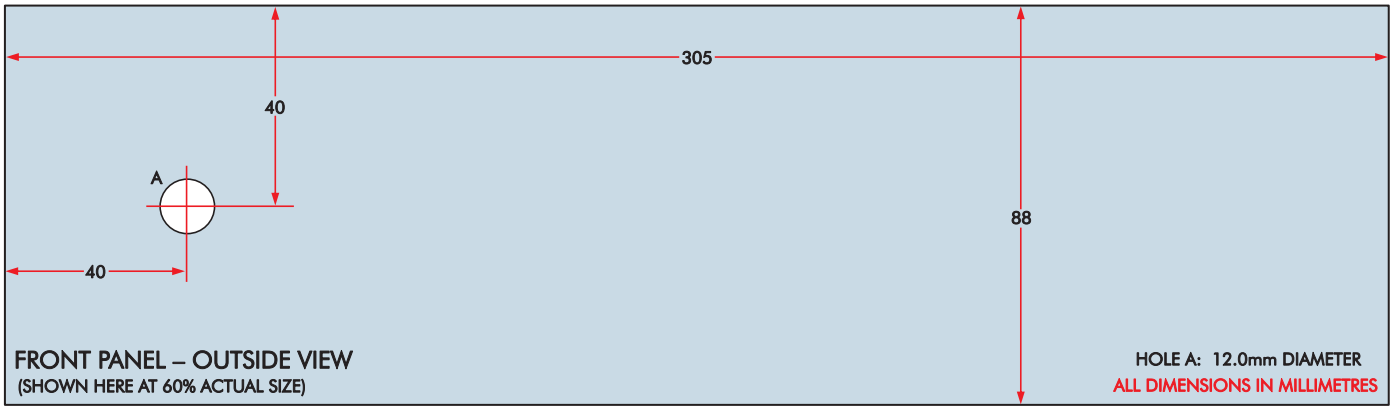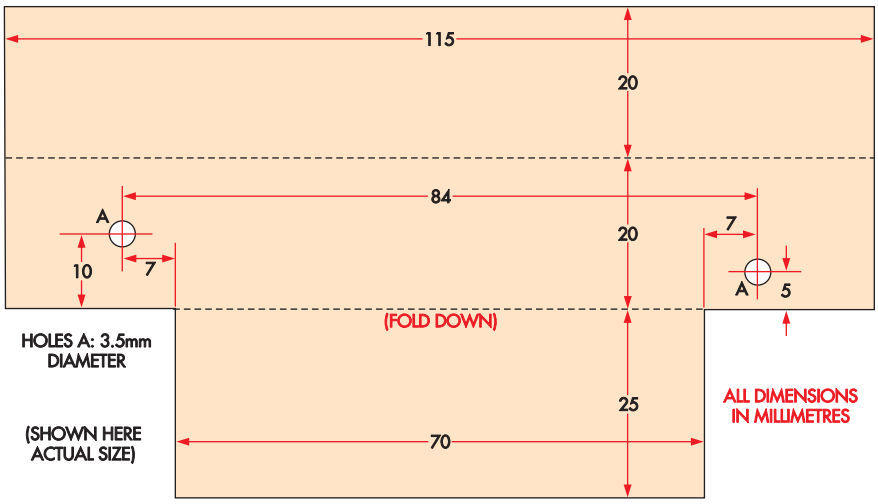
ALL DIMENSIONS IN MILLIMETRES