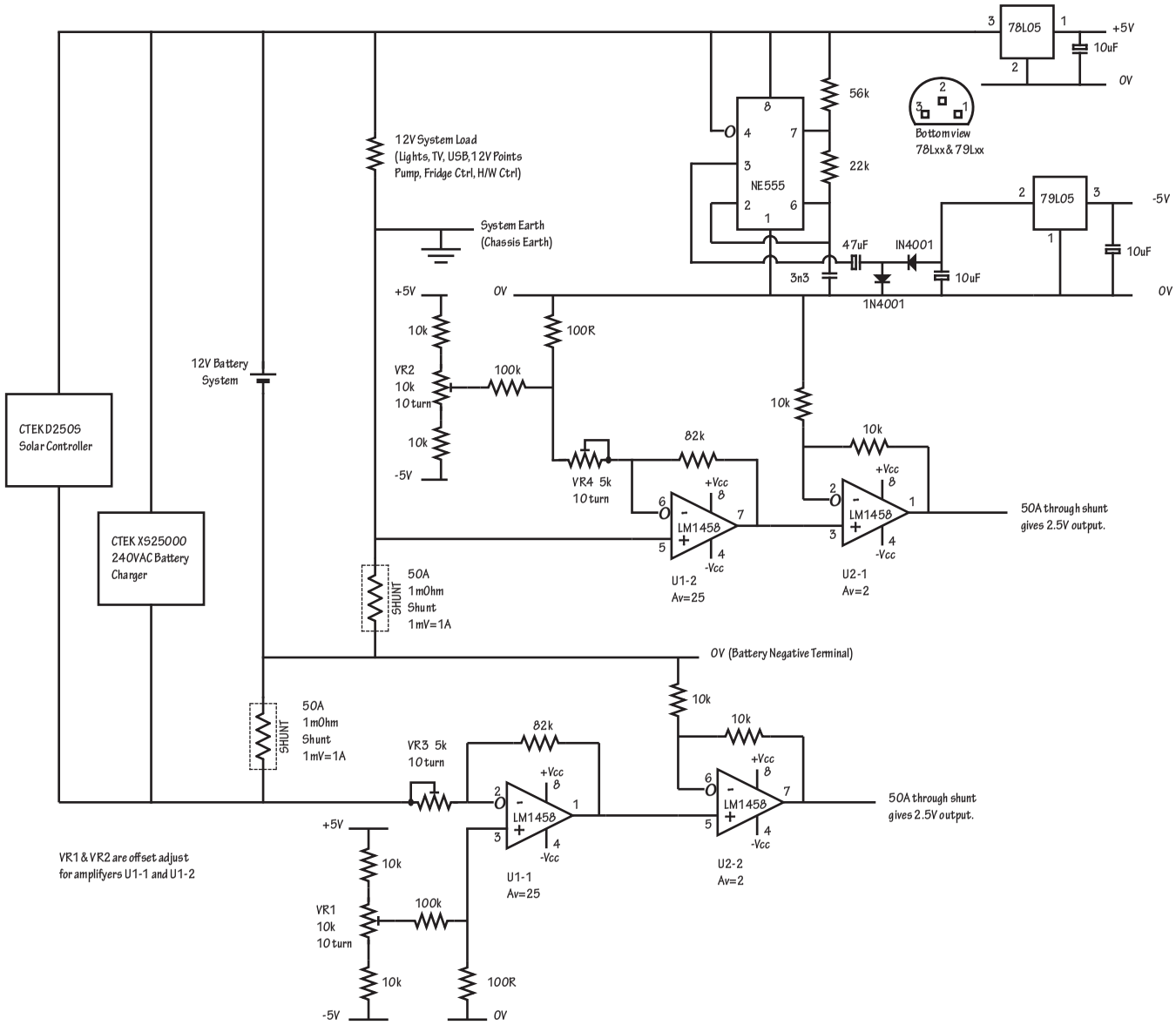

Caravan Battery Monitor Circuit

Drawn by: D. Pankhurst
Date: 2 March 2012